IHS

bre press

BRE Building Elements

Walls, windows and doors

H W Harrison
and
R C de Vekey

Performance, diagnosis, maintenance, repair and the avoidance of defects

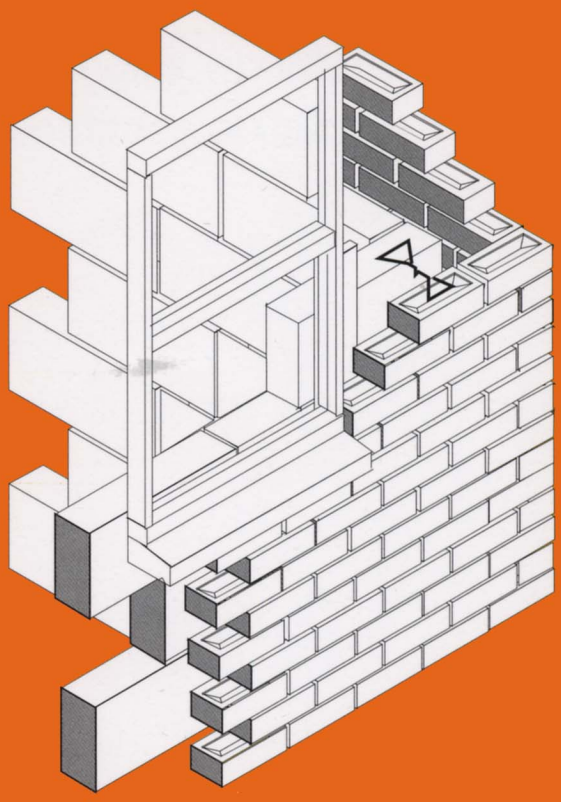

BRE

BRE Building Elements

Walls, windows and doors

Performance, diagnosis, maintenance, repair and the avoidance of defects

H W Harrison, ISO, Dip Arch, RIBA

R C de Vekey, PhD, MRIC, CChem, DIC

BRE
Garston
Watford
WD2 7JR

Contents

Preface

This book is about all the main vertical elements of buildings, both external, including walls, windows and doors, and internal, including separating walls, partitions and internal doors. It deals in outline with the achieved performances and deficiencies of the fabric over the whole age range of the national building stock. Of course, many performance requirements are common to buildings of whatever age, the main difference being that occupants tend to make allowances for deficiencies when the building is old.

The construction of a wall and its constituent materials must have adequate strength, be fire resistant, offer the necessary acoustic and thermal properties, and resist erosion and corrosion for the life of the building, so that the occupants can use the building safely and conveniently. In addition, the external envelope should have adequate resistance to the elements, and must allow the maintenance of a suitable indoor environment.

Information on faults in buildings of all types show that nearly half concern walls, windows and doors. Despite the advice that has been available to the industry from the 1920s, faults which formerly occurred on a substantial scale, such as rain penetration through windows and doors, still recur frequently. Some of these faults may appear to be elementary in character, but this only reflects what happens in practice. Recognition of faults before they occur on site is obviously much more preferable to correction after the event. In some cases an underlying cause is lack of knowledge, in others a lack of care.

Readership

Walls, windows and doors is addressed primarily to building surveyors and other professionals performing similar functions – such as architects and builders – who maintain, repair, extend and renew the national building stock. It will also find application in the education field.

In spite of the current explosion of information, or perhaps because of it, people do not use the guidance that exists. In order to try to remedy that situation, the advice given in Chapters 2 to 10 of this book concentrates on practical details. However, there also needs to be sufficient discussion of principles to impart understanding of the reason for certain practices, and much of this information is given in Chapter 1.

Scope of the book

All kinds of external walls, encompassing loadbearing and non-loadbearing, curtain walls, and overcladding are dealt with first; then windows and external doors, including thresholds. Later chapters include separating walls, partitions, and internal doors and stair enclosures including protected shafts. In principle, all types of buildings are included, though obvious practical considerations of space decree that information on heritage buildings is limited in scope.

The book is not a manual of construction practice, nor does it provide the reader with the information necessary to design a wall. Both good and bad features of walls, windows and doors and the joints between them are described, and sources of further information and advice are offered. The drawings are not working drawings but merely show either those aspects to which the particular attention of readers needs to be drawn or simply provide typical details to support text.

Excluded from the scope of this book is consideration of foundations for walls, or basements, which will be dealt with in another publication. Wall-to-roof junctions at eaves and verges, and fabric or flexible plastics sheathings to buildings were dealt with in the companion book, *Roofs and roofing*.

As with the other books in this series, the text concentrates on those aspects of construction which, in the experience of BRE, lead to the greatest number of problems or greatest potential expense, if carried out unsatisfactorily. It follows that these problems will be picked up most frequently by maintenance surveyors and others carrying out remedial work on walls, windows and doors. Occasionally there is information relating to a fault which is infrequently encountered, and about which it may in consequence be difficult to locate information. Although most of the information relates to older buildings, much material concerning observations by BRE of new buildings under construction in the period from 1985 to 1995 is also included.

Many of the difficulties which are referred to BRE for advice stem from too hasty an assumption about the causes of a particular defect. Very often the symptom is treated, not the

cause, and the defect recurs. It is to be hoped that this book will encourage a systematic approach to the diagnosis of walls and walling defects.

The case studies provided in some of the chapters are selected from the files of the BRE Advisory Service and the former Housing Defects Prevention Unit, and represent the most frequent kinds of problems on which BRE has been consulted.

The standard headings within the chapters are repeated only where there is a need to refer the reader to earlier statements or where there is something relevant to add to what has gone before.

Since it is necessary to consider the enclosures for stairways in conjunction with stair flights, enclosures for stairways (including such items as protected shafts) are therefore considered as elements of walls and are dealt with in this book in Chapter 6.3.

In the United Kingdom, there are three different sets of building regulations: *The Building Regulations 1991* which apply to England and Wales; *The Building Standards (Scotland) Regulations 1990*; and *The Building Regulations (Northern Ireland) 1994*. There are many common provisions between the three sets, but there are also major differences. This book has been written against the background of the building regulations for England and Wales since, although there has been an active Advisory Service for Scotland and Northern Ireland, the highest proportion of site inspections has been carried out in England and Wales. In addition, the technical aspects of the book are affected more by exposure due to location and height above sea level than by national or administrative boundaries. The fact that the majority of references to building regulations are to those for England and Wales, should not make the book inapplicable to Scotland and Northern Ireland.

There is insufficient space in this book to deal with the highly sophisticated new forms of external walls, such as the so-called ‘smart’ or intelligent skins, employing variable external fabric, to improve solar control and daylight utilisation. It is intended that these form part of a further book in this series. Information relating to these techniques may be sought from BRE.

Some important definitions

Since the book is mainly about the problems that can arise in walls, windows and doors, two words, ‘fault’ and ‘defect’, need precise definition. Fault describes a departure from good practice in design or execution of design: it is used for any departure from requirements specified in building regulations, British Standards and Codes of practice, and the published recommendations of authoritative organisations. A defect – a shortfall in performance – is the product of a fault, but while such a consequence cannot always be predicted with certainty, all faults have the potential for leading to defects. The word failure has occasionally been used to signify the more serious defects (and catastrophes!).

Where the term 'investigator' has been used, it covers a variety of roles including a member of BRE's Advisory Service, a BRE researcher or a consultant working under contract to BRE.

Because the term ‘separating wall’ has been used in the construction industry from the earliest days, and is still in current use, we prefer to use it in this book as a generic term despite the comparable term ‘compartment wall’ which is found in the national building regulations.

Acknowledgements

Photographs which do not bear an attribution have been provided from our own collections or from the BRE Photographic Archive, a unique collection dating from the early 1920s.

To the following colleagues, and former colleagues, who have suggested material for this book or commented on drafts, or both, we offer our thanks:

M J Atkins, P Bonfield, R Cox, E J Daniels, Maggie Davidson, C Grimwood, W H (Bill) Harrison, C Holland, M Howarth, Dr P Littlefair, Penny Morgan, F Nowak, Dr R Orsler, M Pound, P W Pye, R E H Read, J Reid, Justine Redshaw, B Reeves, J Seller, A J Stevens, C M Stirling, N Tinsdeall, P M Trotman, P Walton, and Dr T Yates, all of the BRE.

We wish to acknowledge a special debt to P M Trotman for providing the majority of the information in Chapter 2.6.

In addition, acknowledgement is given to the original though anonymous authors of *Principles of modern building*, Volume 1, from which several passages have been adapted and updated.

H W H
R C de V
July 1998

Chapter 1 The basic functions of the vertical elements

Figure 1.1
Tay House, Glasgow (Photograph by permission of Stoakes Systems Ltd)

This first chapter deals in turn with the basic functions which affect all of the vertical external envelope of a building, whether large (Figure 1.1) or small, and all of its vertical internal subdivisions. In later chapters each of these functions is considered in greater detail where relevant to a particular component. The chapter takes its cue from a passage in *Principles of modern building*: '*It will be convenient to consider the whole range of wall functions together, even though any given wall, external or internal, loadbearing or non-loadbearing, may not have to perform all of them*'.

Chapter 1.1 Strength and stability

The predominating factor in the design of a wall is whether it has to carry an imposed load, for example from floors and roofs. Ever since Roman times the loading on a non-framed wall has largely governed its thickness, and over the years conventions became established for their construction.

However, it is only comparatively rarely that the wall can stand by itself without receiving support or restraint from the remainder of the building. Even the smaller domestic scale building of loadbearing brick often relies on the floor to provide lateral restraint to the external wall. All that this chapter can do is to draw attention to some of the more important considerations in relation to the contribution which walls make to the structure as a whole, but not to provide sufficient information to allow the structural design of walls to be carried out.

All walls need to be sufficiently strong to carry the self weight of the structure, together with imposed loads; for example those due to furniture, equipment or the occupants of the building.

Current requirements as far as the structure of walls is concerned are embodied in the various national building regulations. Taking the England and Wales Regulations[15] as an example:

'(1) The building shall be constructed so that the combined dead, imposed and wind loads are sustained and transmitted by it to the ground

(a) safely; and

(b) without causing such deflection or deformation of any part of the building, or such movement of the ground, as will impair the stability of any part of another building

(2) In assessing whether a building complies with sub paragraph (1) regard shall be had to the imposed and wind loads to which it is likely to be subjected in the ordinary course of its use for the purpose for which it is intended.'

Structural design of walls for buildings is covered by the main British Standard Codes of practice for the various materials:

- steel to BS 5950-1 to 9[16]
- concrete to BS 8110-1 to 3[17]
- timber to BS 5268[18]
- masonry to BS 5628[19], Approved Document 1/2[20] or BS 8103[21]

Loads

There is a wide range of structural considerations that may be required of a walling system, ranging from purely non-loadbearing cladding to the cellular masonry or concrete walling system which ultimately carries all the actions on a structure. The forces are illustrated by Figure 1.2.

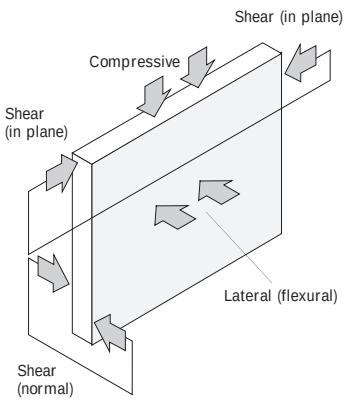

Figure 1.2
Different loadings on a wall

Dead loads

The dead weight of any floors, partitions, ceilings, roofs and claddings must be carried to the ground (foundations) via a structural frame or a loadbearing wall. The design dead load at any point is the sum of all the individual dead loads acting at that point from above factored up to allow for the variability of materials. The partial factor of safety is normally around 1.2–1.4 for unfavourable loads and 0.9 for favourable loads. Eccentric loads